Advice

Although you may feel that everything discussed can be covered from the slides, I strongly suggest you to give a thorough reading from pg 549 to 566 of the book and chapter mentioned on the next page.

McGraw-Hill
©The McGraw-Hill Companies, Inc., 2000

Chapter 19

Network Layer: Logical Addressing

Copyright © The McGraw-Hill Companies, Inc. Permission required for reproduction or display.

19-1 IPv4 ADDRESSES

An IPv4 address is a 32-bit address that uniquely and universally defines the connection of a device (for example, a computer or a router) to the Internet.

Topics discussed in this section:

Address Space
Notations
Classful Addressing
Classless Addressing
Network Address Translation (NAT)

Note

An IPv4 address is 32 bits long.

Note

The IPv4 addresses are unique and universal.

Note

The address space of IPv4 is 2^{32} or 4,294,967,296.

Figure 19.1 *Dotted-decimal notation and binary notation for an IPv4 address*

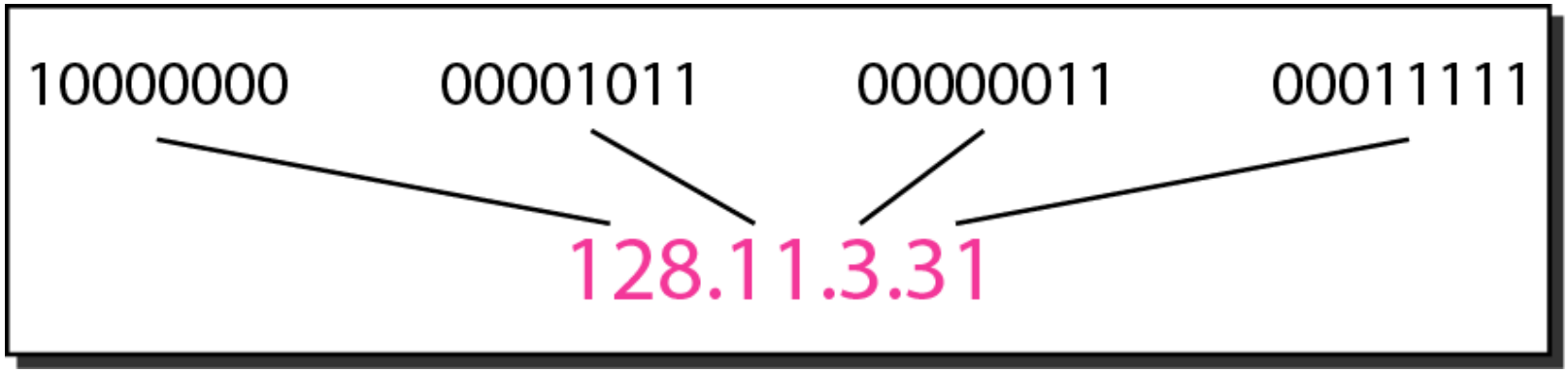

Note

Numbering systems are reviewed in Appendix B.

Example 19.1

Change the following IPv4 addresses from binary notation to dotted-decimal notation.

a. 10000001 00001011 00001011 11101111

b. 11000001 10000011 00011011 11111111

Solution

We replace each group of 8 bits with its equivalent decimal number (see Appendix B) and add dots for separation.

a. 129.11.11.239

b. 193.131.27.255

Example 19.2

Change the following IPv4 addresses from dotted-decimal notation to binary notation.

a. 111.56.45.78

b. 221.34.7.82

Solution

We replace each decimal number with its binary equivalent (see Appendix B).

a. 01101111 00111000 00101101 01001110

b. 11011101 00100010 00000111 01010010

Example 19.3

Find the error, if any, in the following IPv4 addresses.

a. 111.56.045.78

b. 221.34.7.8.20

c. 75.45.301.14

d. 11100010.23.14.67

Solution

a. There must be no leading zero (045).

b. There can be no more than four numbers.

c. Each number needs to be less than or equal to 255.

d. A mixture of binary notation and dotted-decimal notation is not allowed.

Note

In classful addressing, the address space is divided into five classes: A, B, C, D, and E.

Figure 19.2 *Finding the classes in binary and dotted-decimal notation*

	First byte	Second byte	Third byte	Fourth byte
Class A	0			
Class B	10			
Class C	110			
Class D	1110			
Class E	1111			

a. Binary notation

	First byte	Second byte	Third byte	Fourth byte
Class A	0–127			
Class B	128–191			
Class C	192–223			
Class D	224–239			
Class E	240–255			

b. Dotted-decimal notation

Example 19.4

Find the class of each address.

a. 00000001 00001011 00001011 11101111

b. 11000001 10000011 00011011 11111111

c. 14.23.120.8

d. 252.5.15.111

Solution

a. The first bit is 0. This is a class A address.

b. The first 2 bits are 1; the third bit is 0. This is a class C address.

c. The first byte is 14; the class is A.

d. The first byte is 252; the class is E.

Table 19.1 ***Number of blocks and block size in classful IPv4 addressing***

Class	*Number of Blocks*	*Block Size*	*Application*
A	128	16,777,216	Unicast
B	16,384	65,536	Unicast
C	2,097,152	256	Unicast
D	1	268,435,456	Multicast
E	1	268,435,456	Reserved

Note

In classful addressing, a large part of the available addresses were wasted.

Table 19.2 ***Default masks for classful addressing***

Class	*Binary*	*Dotted-Decimal*	*CIDR*
A	**11111111** 00000000 00000000 00000000	**255**.0.0.0	/8
B	**11111111 11111111** 00000000 00000000	**255.255**.0.0	/16
C	**11111111 11111111 11111111** 00000000	**255.255.255**.0	/24

Note

Classful addressing, which is almost obsolete, is replaced with classless addressing.

Example 19.5

Figure 19.3 shows a block of addresses, in both binary and dotted-decimal notation, granted to a small business that needs 16 addresses.

We can see that the restrictions are applied to this block. The addresses are contiguous. The number of addresses is a power of 2 ($16 = 2^4$), and the first address is divisible by 16. The first address, when converted to a decimal number, is 3,440,387,360, which when divided by 16 results in 215,024,210.

Figure 19.3 *A block of 16 addresses granted to a small organization*

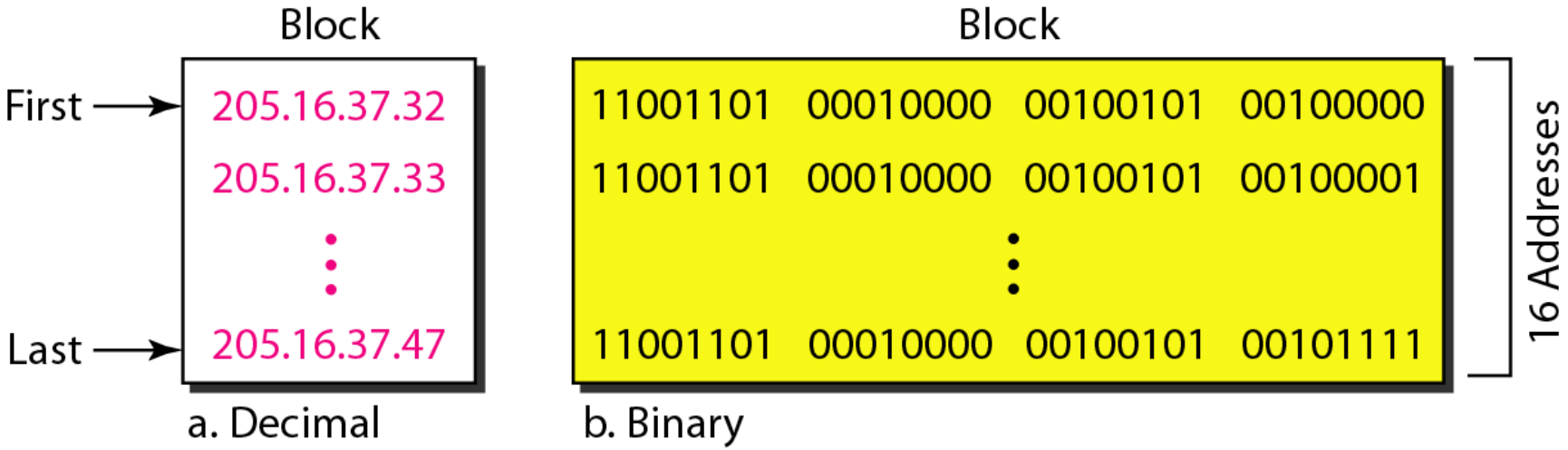

Note

In IPv4 addressing, a block of addresses can be defined as

x.y.z.t /*n*

in which x.y.z.t defines one of the addresses and the /*n* defines the mask.

Note

The first address in the block can be found by setting the rightmost $32 - n$ bits to 0s.

Example 19.6

A block of addresses is granted to a small organization. We know that one of the addresses is 205.16.37.39/28. What is the first address in the block?

Solution

The binary representation of the given address is

11001101 00010000 00100101 00100111

If we set 32−28 rightmost bits to 0, we get

11001101 00010000 00100101 0010000

or

205.16.37.32.

This is actually the block shown in Figure 19.3.

Note

The last address in the block can be found by setting the rightmost 32 − n bits to 1s.

Example 19.7

Find the last address for the block in Example 19.6.

Solution

The binary representation of the given address is

11001101 00010000 00100101 00100111

If we set 32 − 28 rightmost bits to 1, we get

11001101 00010000 00100101 00101111

or

205.16.37.47

This is actually the block shown in Figure 19.3.

Note

The number of addresses in the block can be found by using the formula 2^{32-n}.

Example 19.8

Find the number of addresses in Example 19.6.

Solution

The value of n is 28, which means that number of addresses is 2^{32-28} or 16.

Example 19.9

Another way to find the first address, the last address, and the number of addresses is to represent the mask as a 32-bit binary (or 8-digit hexadecimal) number. This is particularly useful when we are writing a program to find these pieces of information. In Example 19.5 the /28 can be represented as

11111111 11111111 11111111 11110000

(twenty-eight 1s and four 0s).

Find

a. The first address

b. The last address

c. The number of addresses.

Example 19.9 (continued)

Solution

a. *The first address can be found by ANDing the given addresses with the mask. ANDing here is done bit by bit. The result of ANDing 2 bits is 1 if both bits are 1s; the result is 0 otherwise.*

Address:	11001101	00010000	00100101	00100111
Mask:	**11111111**	**11111111**	**11111111**	**11110000**
First address:	11001101	00010000	00100101	00100000

Example 19.9 (continued)

b. ***The last address can be found by ORing the given addresses with the complement of the mask. ORing here is done bit by bit. The result of ORing 2 bits is 0 if both bits are 0s; the result is 1 otherwise. The complement of a number is found by changing each 1 to 0 and each 0 to 1.***

Address:	11001101	00010000	00100101	00100111
Mask complement:	**00000000**	**00000000**	**00000000**	**00001111**
Last address:	11001101	00010000	00100101	00101111

Example 19.9 (continued)

c. ***The number of addresses can be found by complementing the mask, interpreting it as a decimal number, and adding 1 to it.***

Mask complement:	**000000000 00000000 00000000 00001111**
Number of addresses:	15 + 1 = 16

Figure 19.4 *A network configuration for the block 205.16.37.32/28*

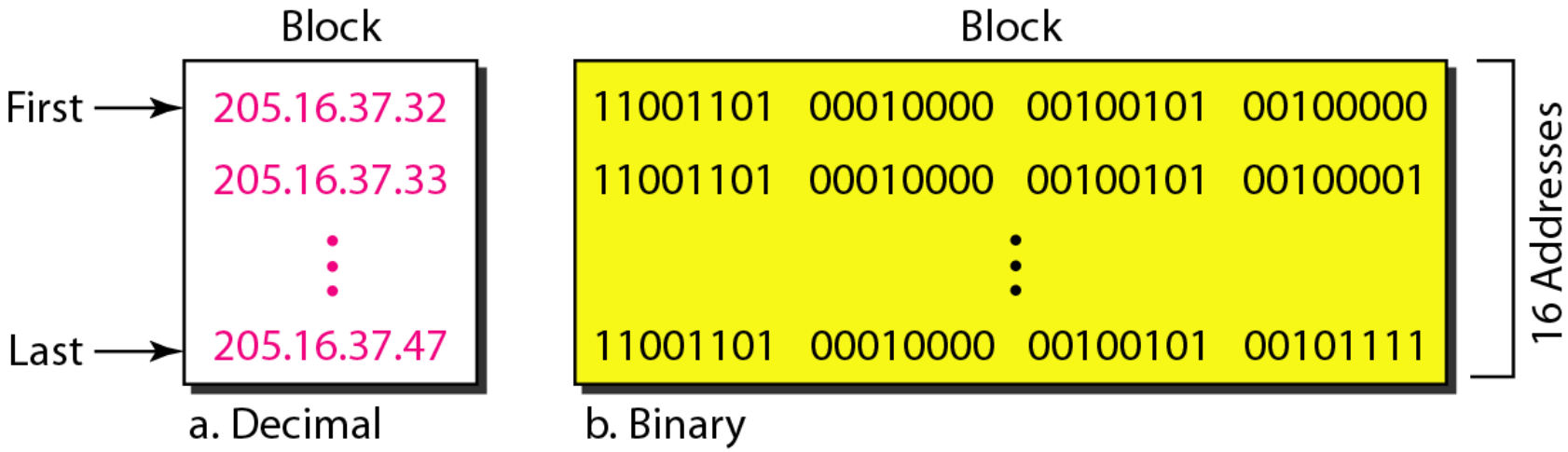

Note

The first address in a block is normally not assigned to any device; it is used as the network address that represents the organization to the rest of the world.

Figure 19.5 *Two levels of hierarchy in an IPv4 address*

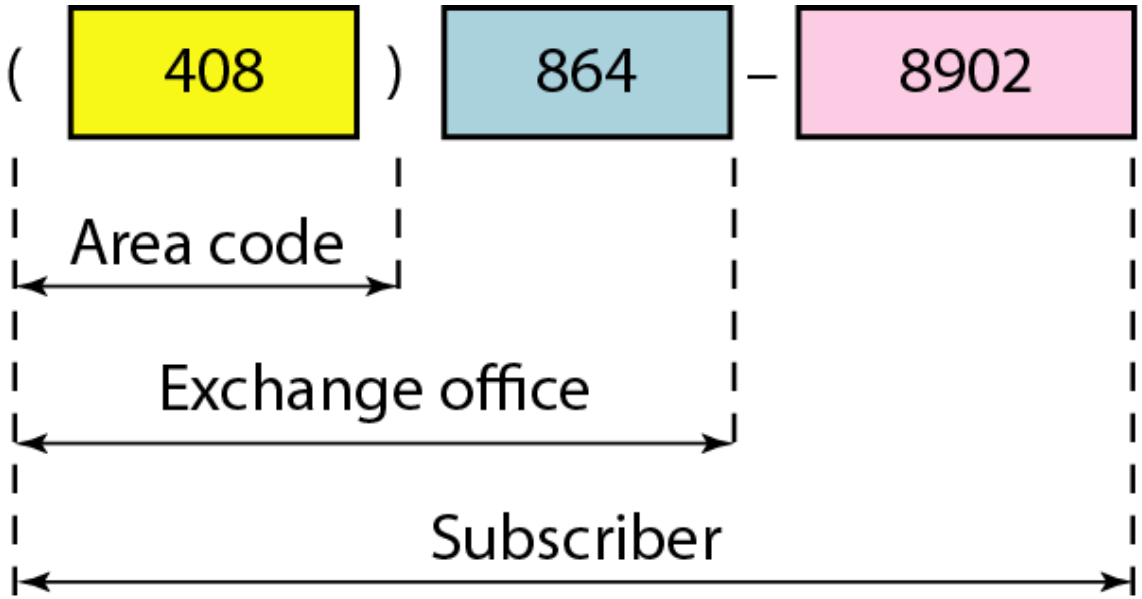

Figure 19.6 *A frame in a character-oriented protocol*

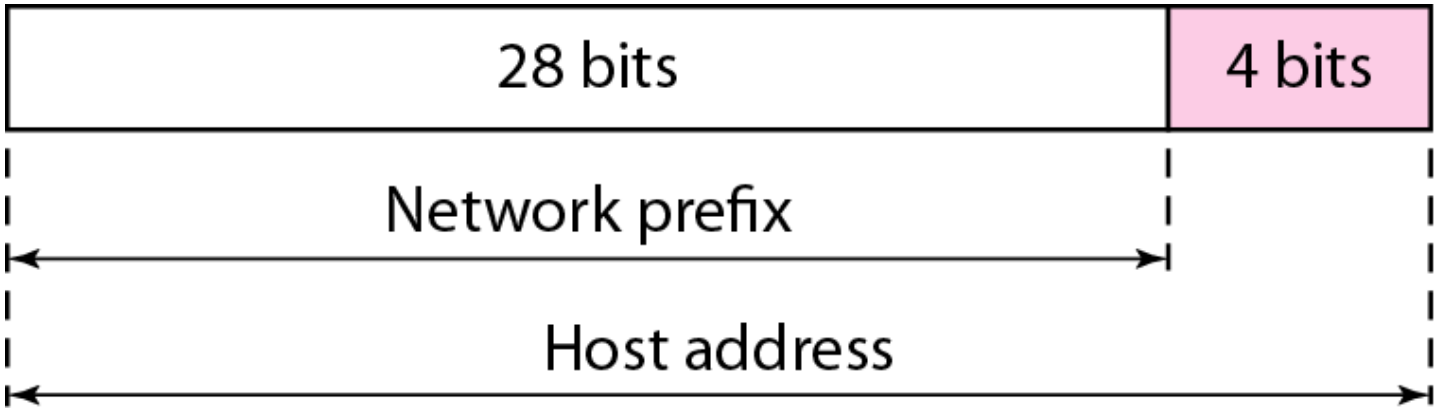

Note

Each address in the block can be considered as a two-level hierarchical structure:
the leftmost *n* bits (prefix) define the network;
the rightmost 32 − n bits define the host.

Figure 19.7 *Configuration and addresses in a subnetted network*

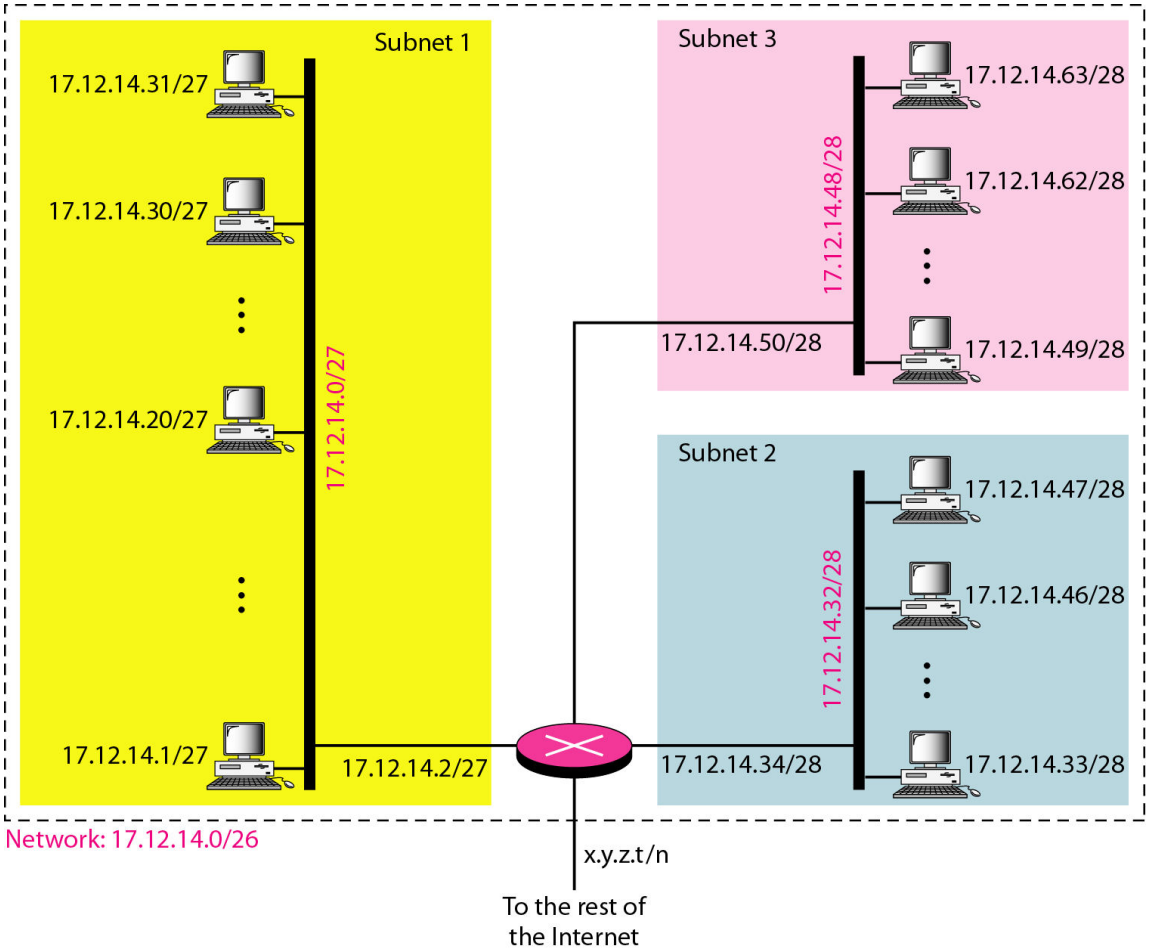

Figure 19.8 *Three-level hierarchy in an IPv4 address*

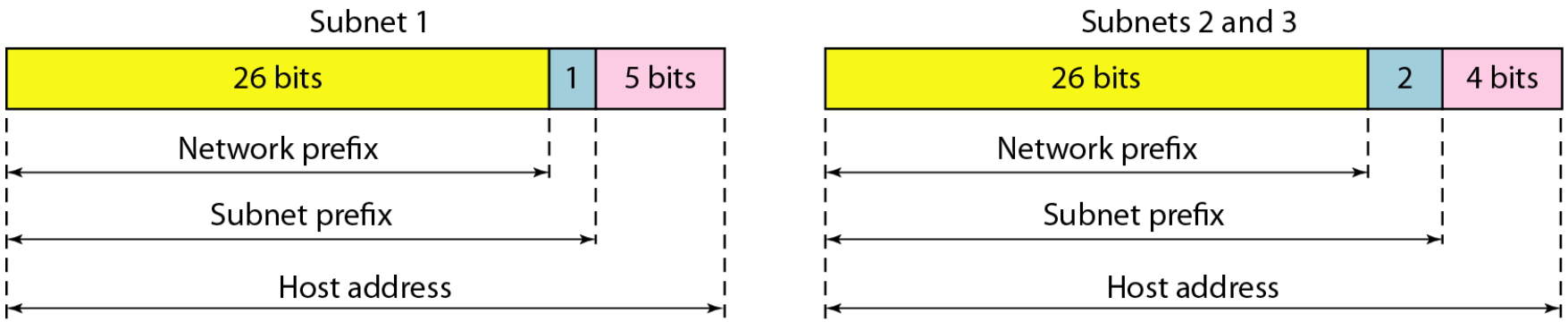

Example 19.10

An ISP is granted a block of addresses starting with 190.100.0.0/16 (65,536 addresses). The ISP needs to distribute these addresses to three groups of customers as follows:

a. The first group has 64 customers; each needs 256 addresses.

b. The second group has 128 customers; each needs 128 addresses.

c. The third group has 128 customers; each needs 64 addresses.

Design the subblocks and find out how many addresses are still available after these allocations.

Example 19.10 (continued)

Solution

Figure 19.9 shows the situation.

Group 1

For this group, each customer needs 256 addresses. This means that 8 (log2 256) bits are needed to define each host. The prefix length is then 32 − 8 = 24. The addresses are

1st Customer:	*190.100.0.0/24*	*190.100.0.255/24*
2nd Customer:	*190.100.1.0/24*	*190.100.1.255/24*
. . .		
64th Customer:	*190.100.63.0/24*	*190.100.63.255/24*

Total = 64 × 256 = 16,384

Example 19.10 (continued)

Group 2

For this group, each customer needs 128 addresses. This means that 7 (log2 128) bits are needed to define each host. The prefix length is then 32 − 7 = 25. The addresses are

1st Customer:	*190.100.64.0/25*	*190.100.64.127/25*
2nd Customer:	*190.100.64.128/25*	*190.100.64.255/25*
. . .		
128th Customer:	*190.100.127.128/25*	*190.100.127.255/25*

Total = 128 × 128 = 16,384

Example 19.10 (continued)

Group 3

For this group, each customer needs 64 addresses. This means that 6 ($\log_2 64$) bits are needed to each host. The prefix length is then 32 − 6 = 26. The addresses are

1st Customer:	*190.100.128.0/26*	*190.100.128.63/26*
2nd Customer:	*190.100.128.64/26*	*190.100.128.127/26*
. . .		
128th Customer:	*190.100.159.192/26*	*190.100.159.255/26*

Total = 128 × 64 = 8192

Number of granted addresses to the ISP: 65,536
Number of allocated addresses by the ISP: 40,960
Number of available addresses: 24,576

Figure 19.9 *An example of address allocation and distribution by an ISP*

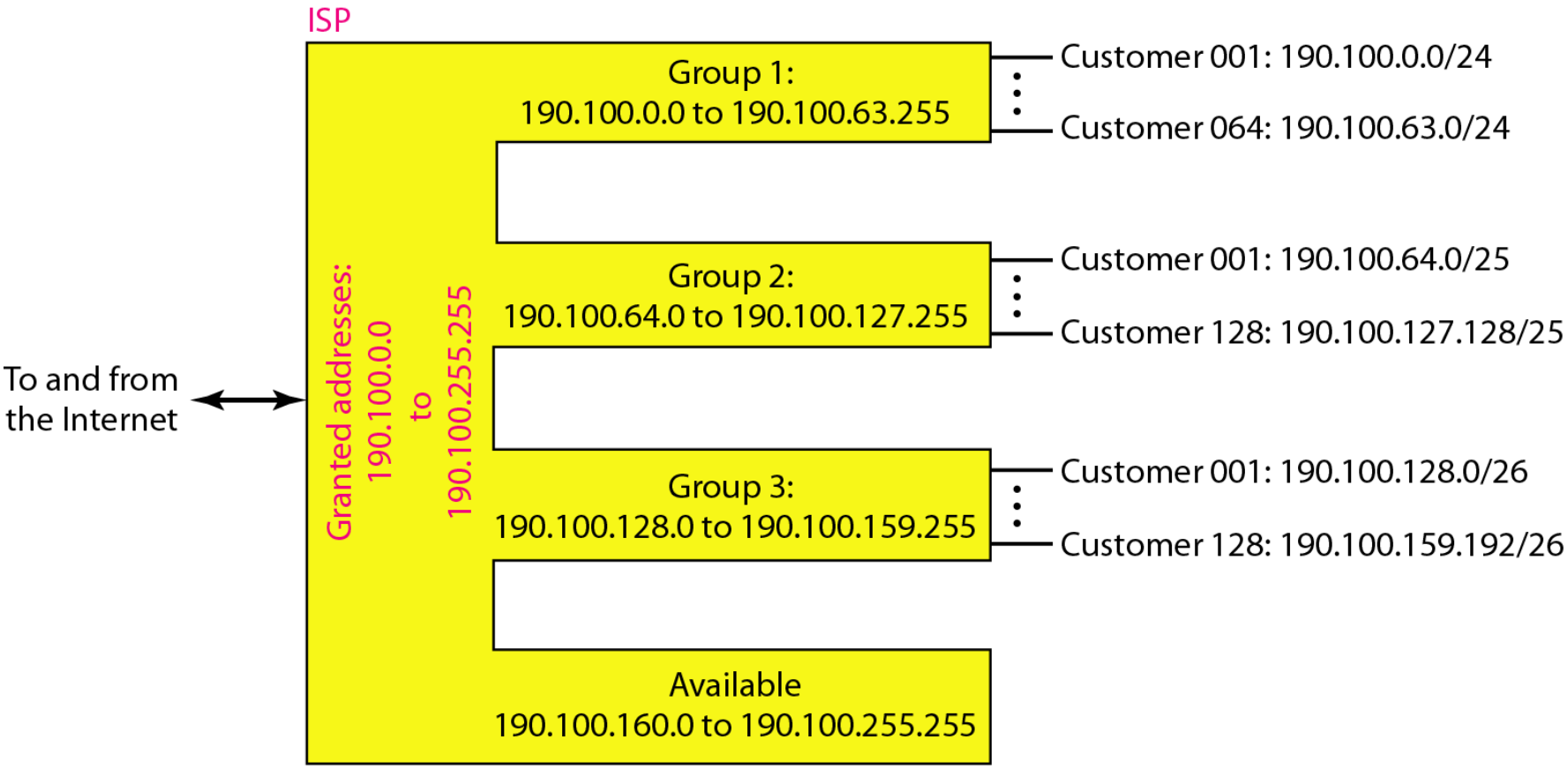

Table 19.3 ***Addresses for private networks***

Range			*Total*
10.0.0.0	to	10.255.255.255	2^{24}
172.16.0.0	to	172.31.255.255	2^{20}
192.168.0.0	to	192.168.255.255	2^{16}

Figure 19.10 *A NAT implementation*

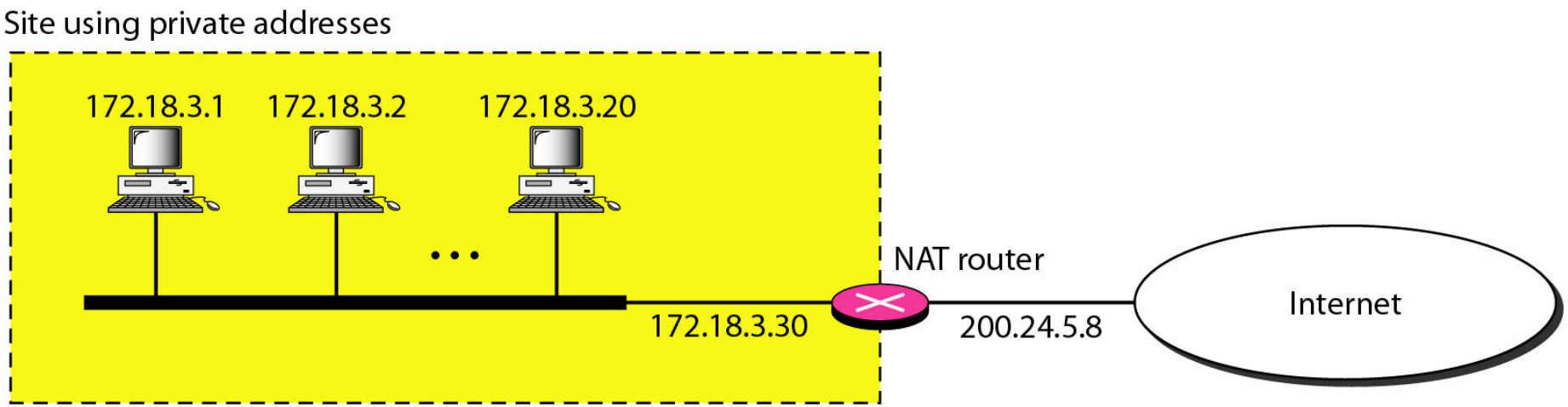

Figure 19.11 *Addresses in a NAT*

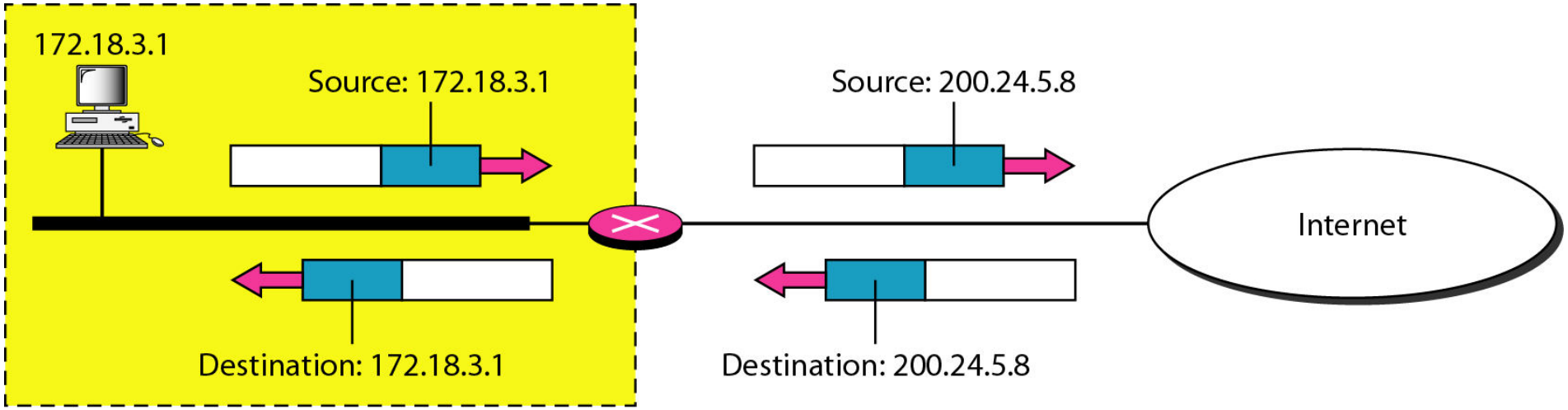

Figure 19.12 *NAT address translation*

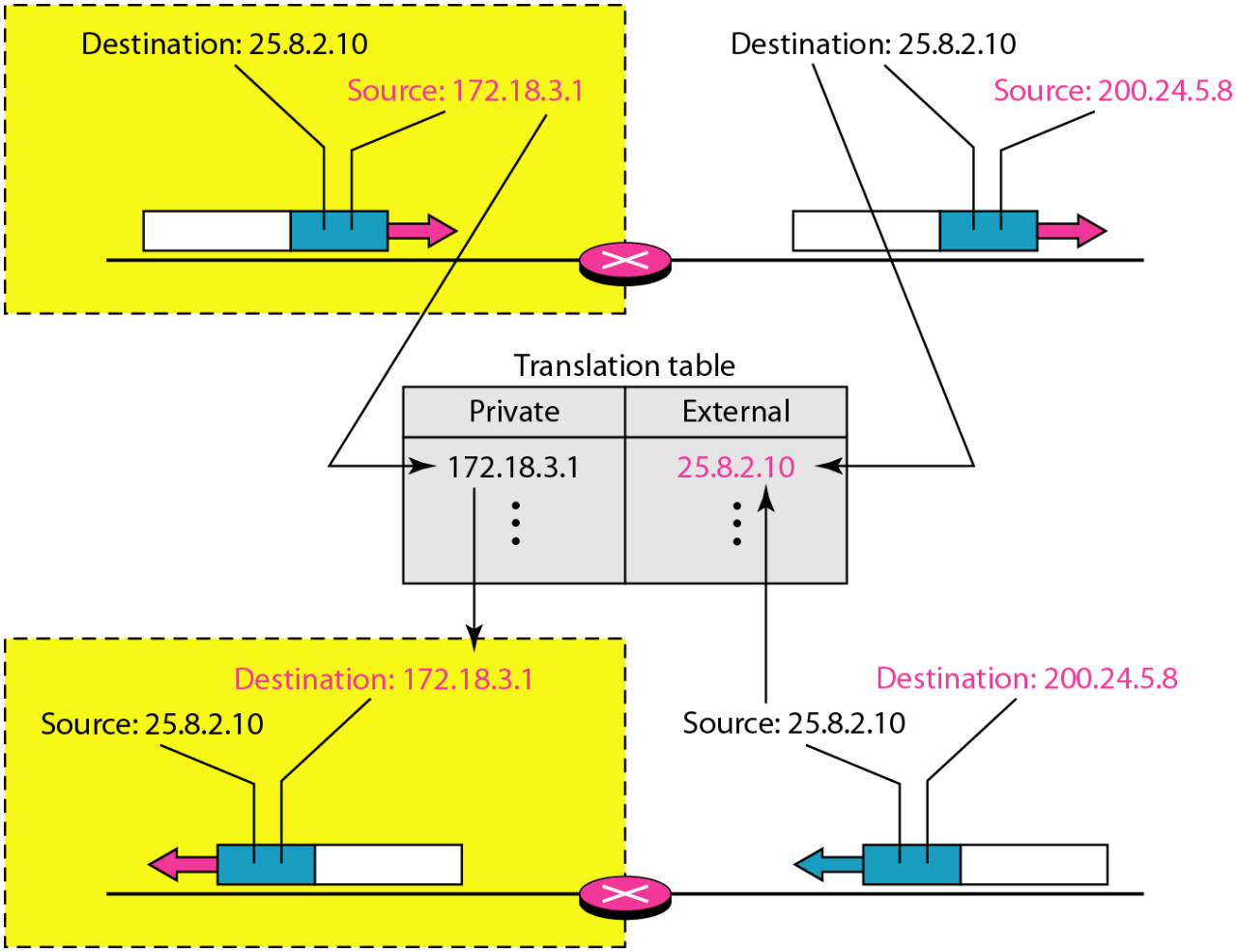

Table 19.4 ***Five-column translation table***

Private Address	*Private Port*	*External Address*	*External Port*	*Transport Protocol*
172.18.3.1	1400	25.8.3.2	80	TCP
172.18.3.2	1401	25.8.3.2	80	TCP
. . .	. . .	. . .	. . .	. . .
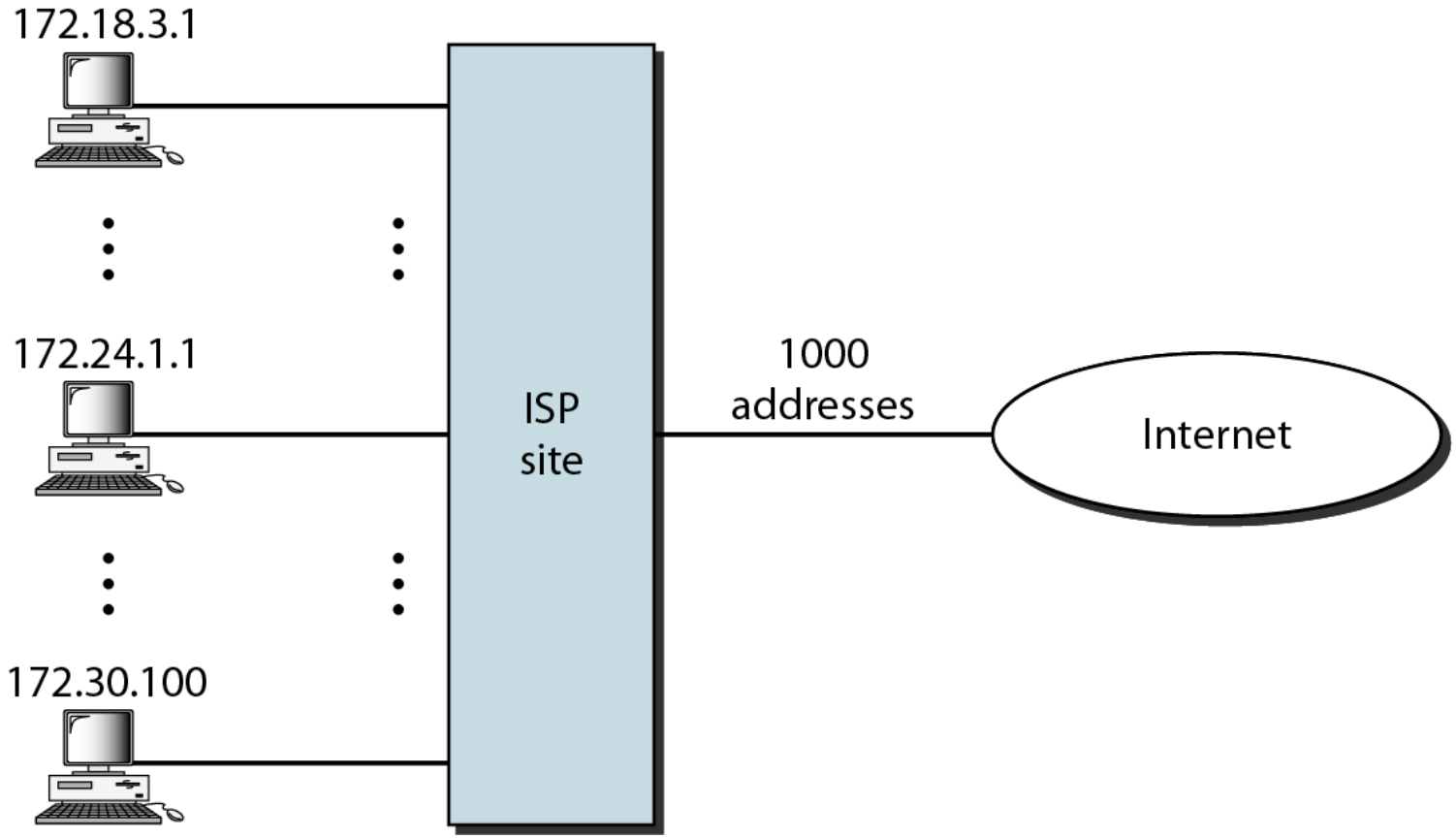
Figure 19.13 *An ISP and NAT*